BEER COOLER

MOBICHILL 55, 2 PRODUCT LINE

DIMENSIONS

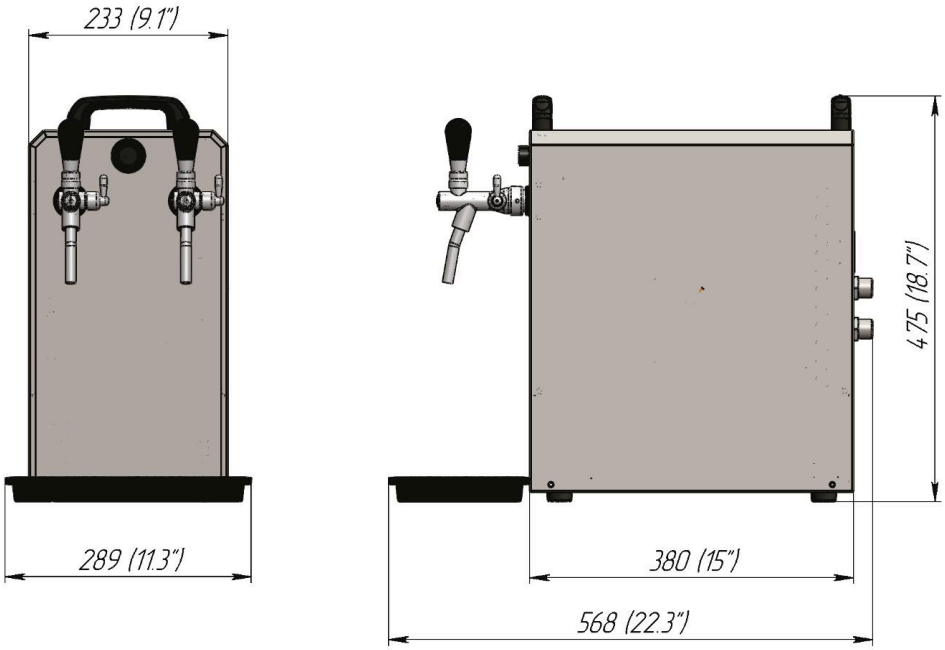

BEER COOLER
MOBICHILL 55, 2 PRODUCT LINE

SPECIFICATIONS

INTERNAL NUMBER	400.00.000.00-XX
PART NUMBER	MobiChill 55
Cooler capacity at Δt = 10 K, L/H	50
NUMBER OF COILS	2
COIL LENGTH, FT	47 ×2
COMPRESSOR POWER, HP	1/5
RUNNING, AMP	5.0
PLUG TYPE (NEMA #)	5-15P
VOLTAGE, V	115
FREQUENCY, Hz	60
INITIAL PULL DOWN TIME (T_{amb}=77°F), min	20
REFRIGERANT	R290
REFRIGERANT CHARGE, G (OZ)	130 (4.58)
WEIGHT GROSS/NET, LB	71 /68
POWER CORD LENGTH, FT	7.5
BEVERAGE CONNECTION	BSP 5/8"×2
OPERATING AMBIENT TEMPERATURE, °F	60-90
CLEARANCE AT LEAST	8” around the entire unit

WIRING DIAGRAM

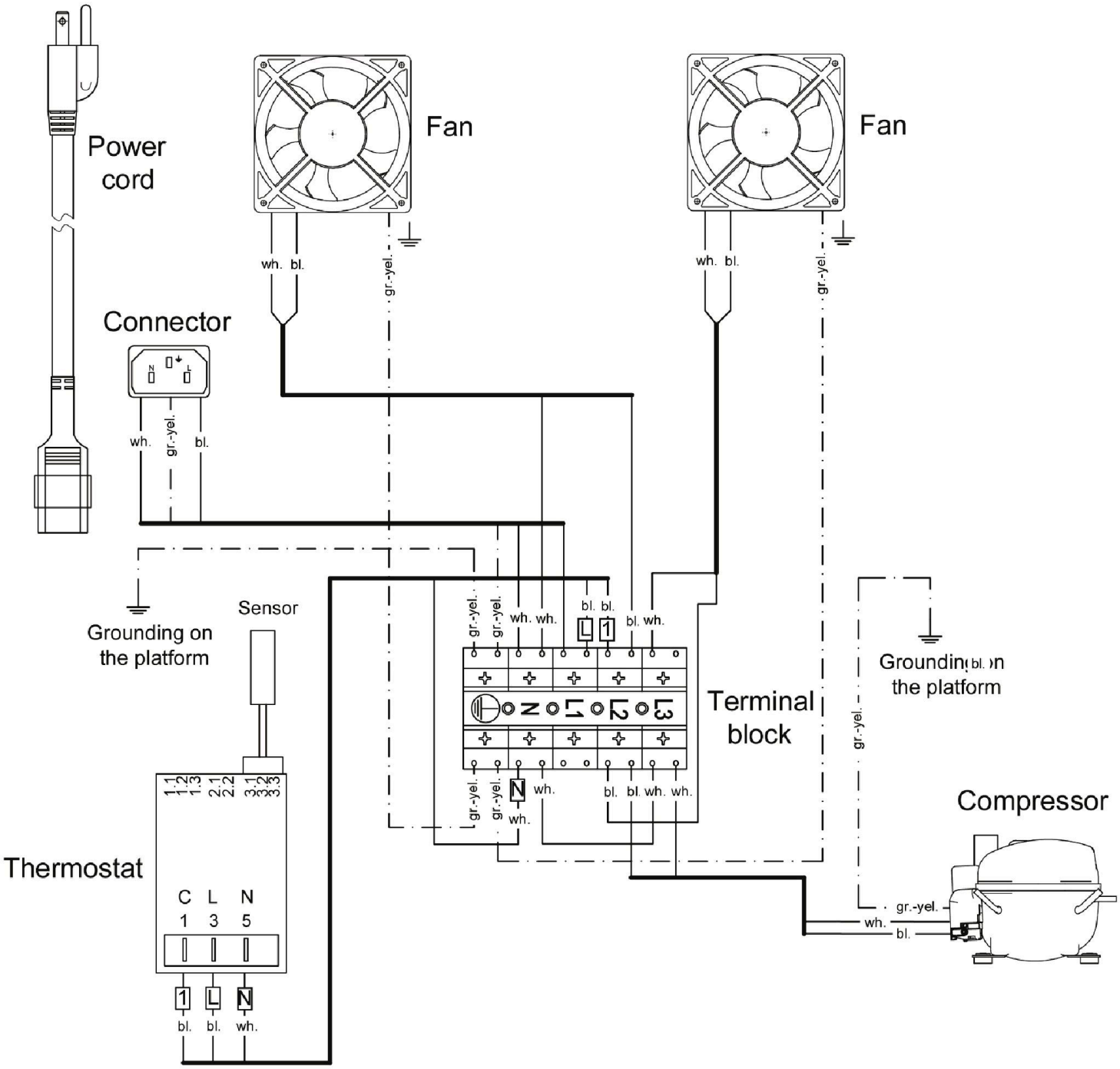

BEER COOLER

MOBICHILL 55, 2 PRODUCT LINE

PARTS

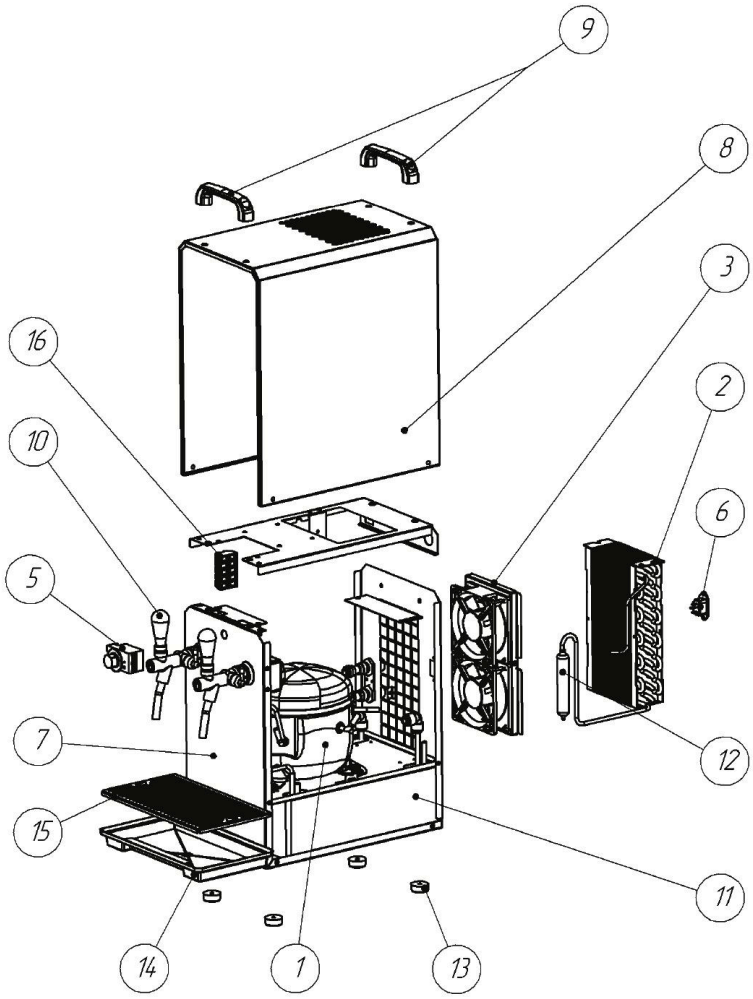

1	Compressor “Cubigel” NLY60RRa
2	Condenser “JINAN RETEK” TFCA1F2PXXXXC
3	Condenser fan “SUNON” SP100A1123XBT×2
4	Capillary tube 2.4.x0.575x4500 mm
5	Thermostat “DANFOSS” EETc 11
6	Connector IEC 320-C14 250V 10A
7	Base
8	Cover
9	Handles
10	Taps
11	Cooling block
12	Filter-drier “DE-NA” GR-15 d6.1xd6.1xd2.5
13	Legs
14	Drip pan
15	Grid to drip pan
16	Push-in cage clamp 862-9X05