COUNTERTOP DRIP TRAY DRAIN INCLUDED
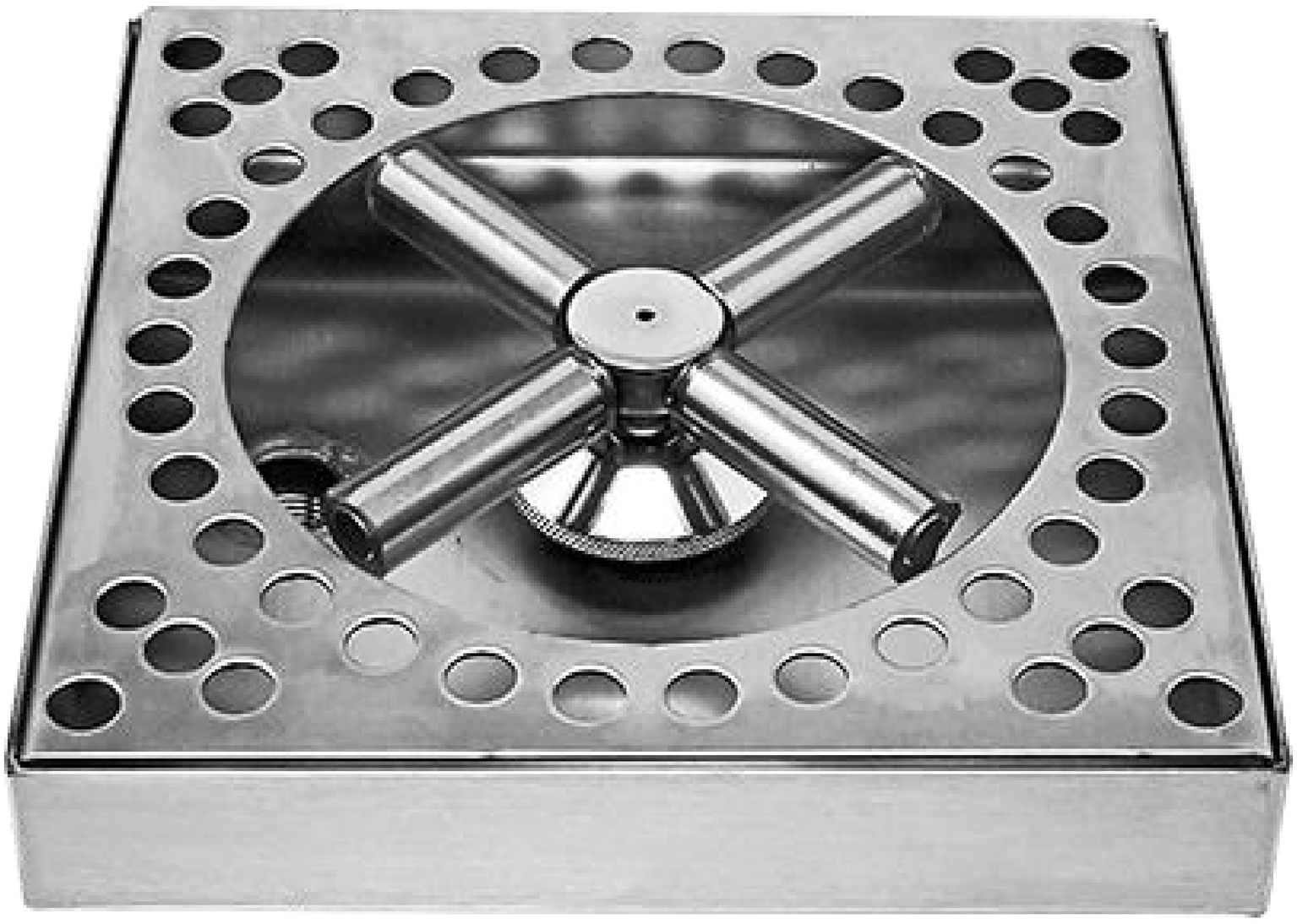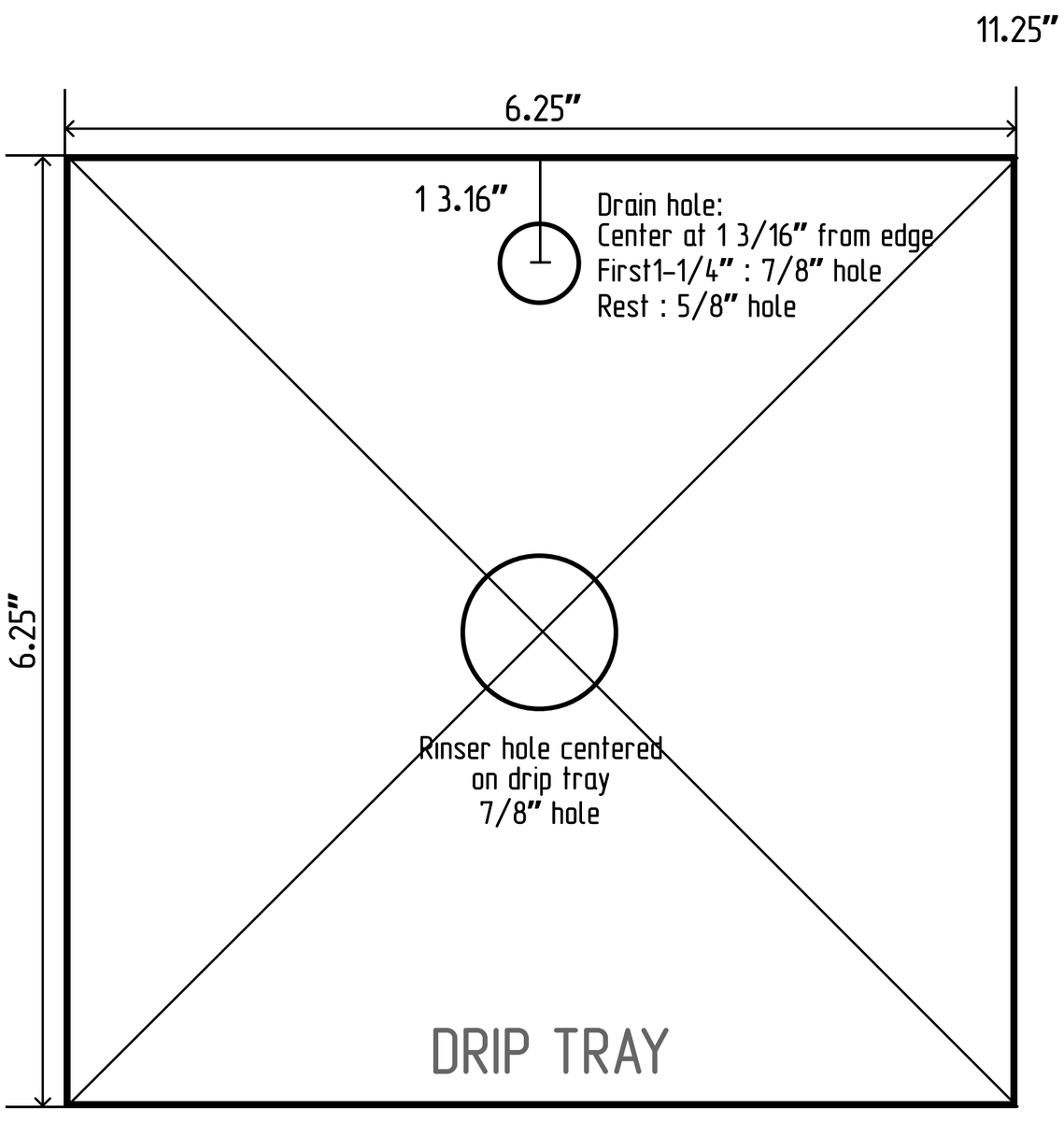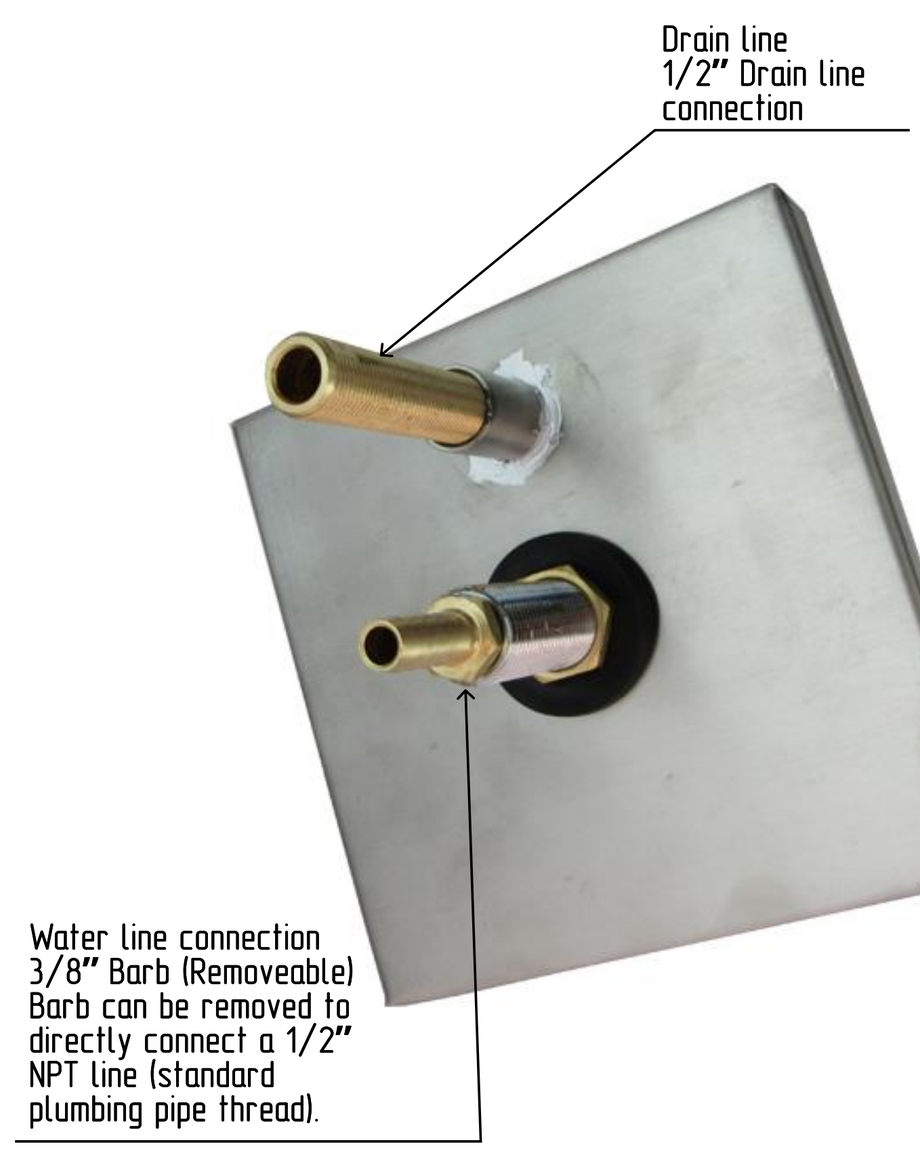
11.25" X 6.25"