UNDERCOUNTER DISPENSER,

6 LINES, WITH SS FAUCETS

Dimensions:

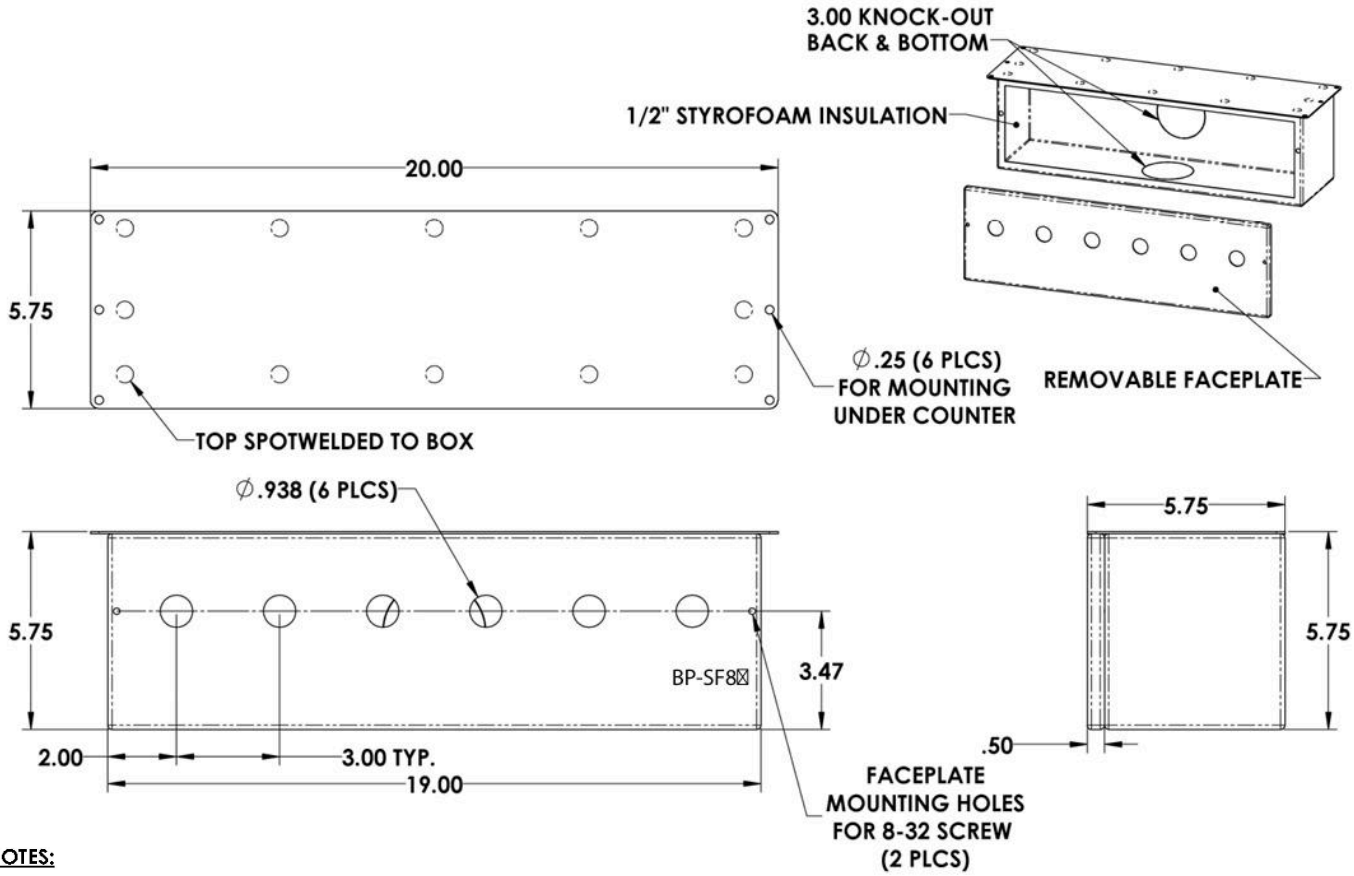

NOTES:

ALL DIMENSIONS ARE OUTSIDE DIMENSIONS
(UNLESS OTHERWISE NOTED)