# MILANO-2
CHROME

## SPECIFICATION

- 304 Stainless Steel product lines and shanks
- 3/8" Copper Glycol recirculation lines
- Tap handles not included

## OPTIONS

- Air-cooled option available
- Custom made branded ceramic tap handles available
- Powder coating available
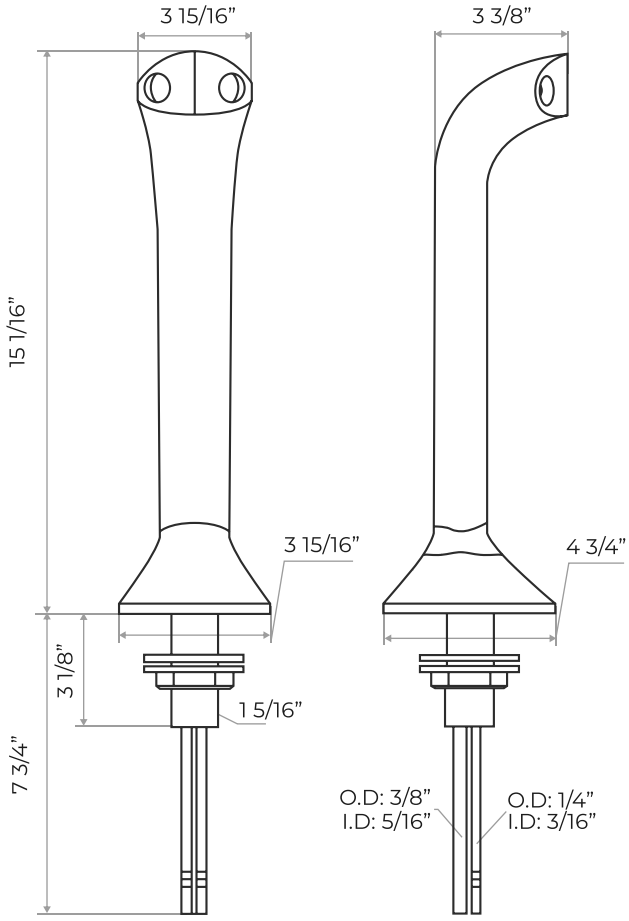
| PART # | FAUCETS | PRODUCT LINES | COOLING | FINISH |
|---|---|---|---|---|
| MLN2C | 2 | 3/16" I.D Stainless Steel, 1 3/8 ft long | Glycol | Chrome |